SPECIFY GENUINE **BARNETT BATES** PATTERN:

800-541-3912

STL-80

(ALUMINUM)

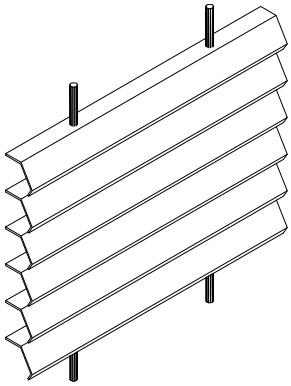

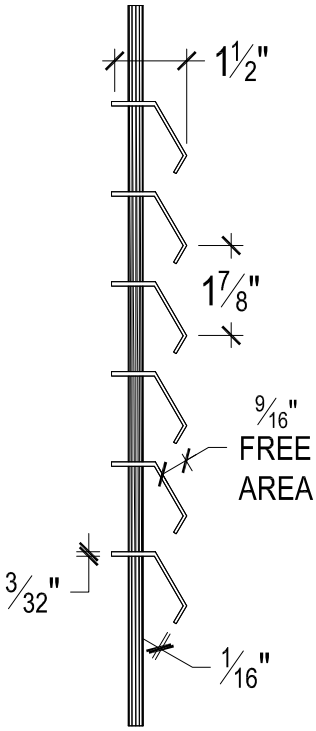

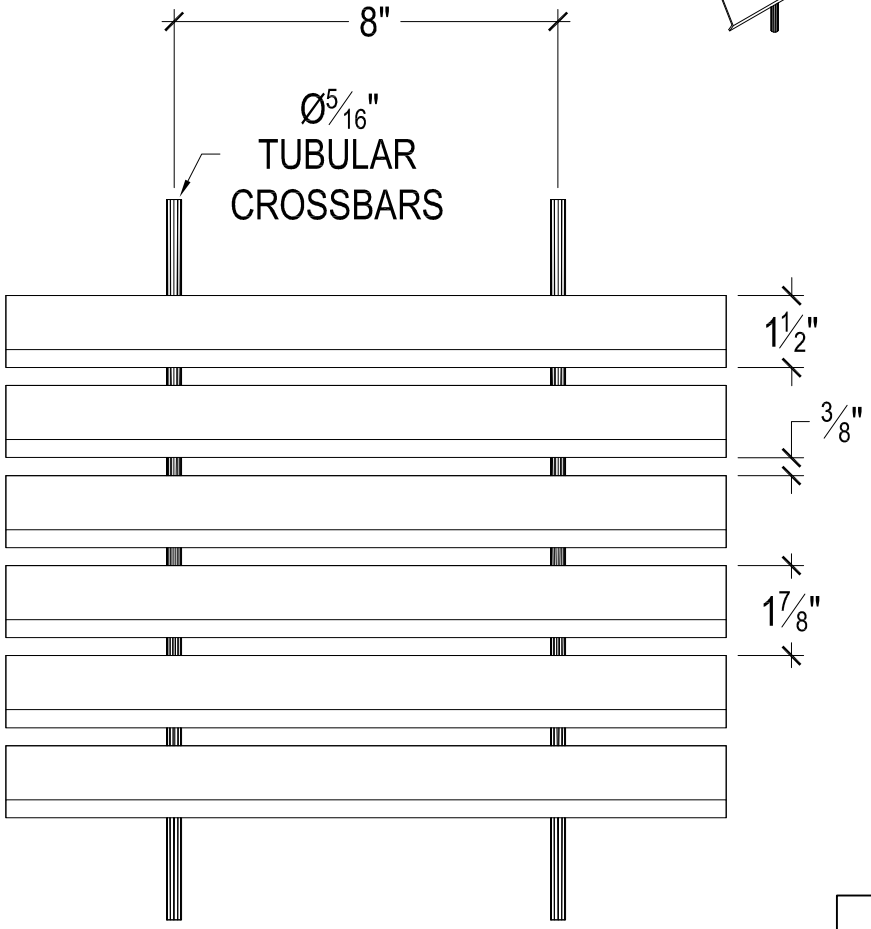

FREE AREA FOR STL-80 = 58.4%

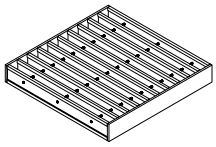

ALL TYPES OF GRATING

BARNETT BATES

Barnett Bates Corporation
500 Mills Road
Joliet, IL 60433-2795

WWW.BARNETTBATES.COM
email:sales@barnettbates.com

Toll Free: (800) 541-3912
Joliet: (815) 726-5223
Fax: (815) 726-9210

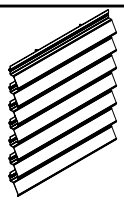

ARCHITECTURAL FENCING